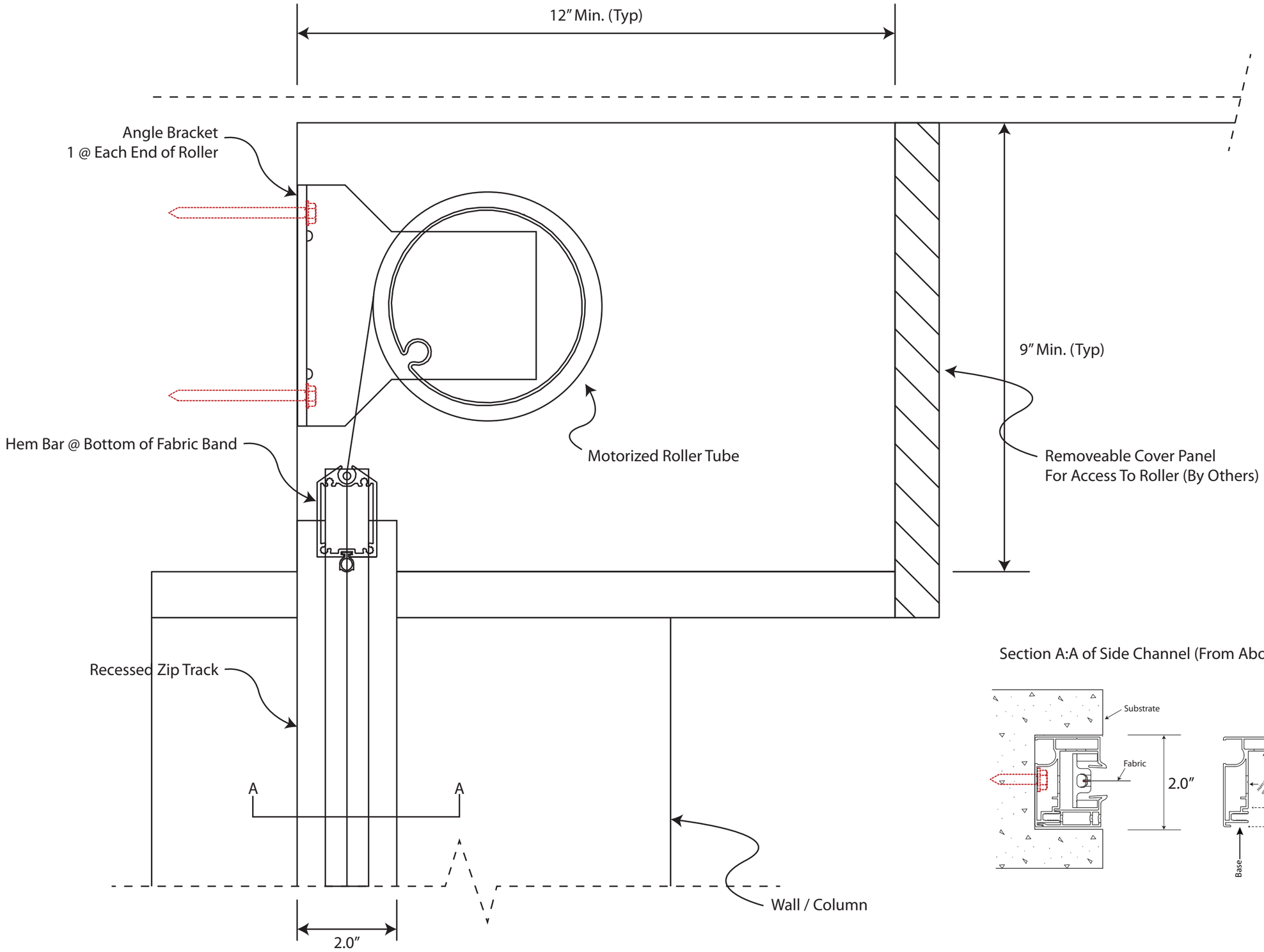

Section A:A of Side Channel (From Above Looking Down):

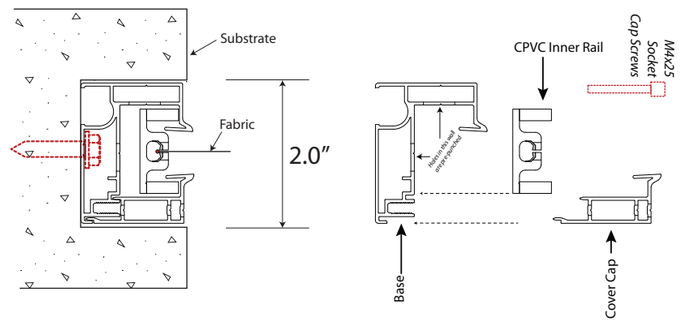

Crown Evo Recessed Front Loading ZipTrack System scale 1:2

By: Jared Grodnitzky Date: 4/13/2021 Rev:1

Crown Shade Company Baltimore, Maryland 21237 crownshadeco.com|800.445.5557